DOOR SCHEDULE- GLENNS CAMPUS

NUMBER		DOOR							FRAME			HDW	REMARKS	
DOOR #	SPACE#	ROOM NAME	WIDTH	HEIGHT	THICK.	MATERIAL	FINISH	TYPE	MATERIAL	HEAD	JAMB	SET NO.	RATING/MIN.	NOTES
100	100	VESTIBULE	(2) 3'-0"	7'-0"	1 3/4"	ALUM	PREFIN.	D	ALUM	11/A21	12/A21	01	-	NOTES 1 & 4
101	101	CORRIDOR	(2) 3'-0"	7'-0"	1 3/4"	ALUM	PREFIN	D	ALUM	11/A21	12/A21	03	-	NOTE 2
103	103	ADMISSIONS	3'-0"	7'-0"	1 3/4"	ALUM	PREFIN	D	ALUM	4/A21	5/A21	04	-	NOTE 2
104	104	OFFICE	3'-0"	7'-0"	1 3/4"	SCW	STAIN	B	H.M.	2/A21	3/A21	05	-	NOTES 2 & 3
106	106	MEN	3'-0"	7'-0"	1 3/4"	SCW	STAIN	A	ALUM	4/A21	5/A21	06	-	-
106A	106A	JANITOR	3'-0"	7'-0"	1 3/4"	SCW	STAIN	A	H.M.	2/A21	3/A21	07	-	-
107	107	WOMEN	3'-0"	7'-0"	1 3/4"	SCW	STAIN	A	ALUM	4/A21	5/A21	06	-	-
108	108	CLOSET	(2) 2'-0"	7'-0"	1 3/4"	SCW	STAIN	A	ALUM	4/A21	5/A21	08	-	-
109	109	OFFICE	3'-0"	7'-0"	1 3/4"	SCW	STAIN	B	ALUM	4/A21	5/A21	09	-	NOTE 2
110	110	OFFICE	3'-0"	7'-0"	1 3/4"	SCW	STAIN	B	ALUM	4/A21	5/A21	09	-	NOTE 2
111	111	OFFICE	3'-0"	7'-0"	1 3/4"	SCW	STAIN	B	ALUM	4/A21	5/A21	09	-	NOTE 2
112	112	OFFICE	3'-0"	7'-0"	1 3/4"	SCW	STAIN	B	ALUM	4/A21	5/A21	09	-	NOTE 2
113	113	OPEN OFFICE	3'-0"	7'-0"	1 3/4"	ALUM	PREFIN	D	ALUM	4/A21	5/A21	10	-	NOTE 2
114	114	OFFICE	3'-0"	7'-0"	1 3/4"	SCW	STAIN	B	H.M.	2/A21	3/A21	05	-	NOTE 2
115	115	OFFICE	3'-0"	7'-0"	1 3/4"	SCW	STAIN	B	H.M.	2/A21	3/A21	05	-	NOTE 2
116	116	OFFICE	3'-0"	7'-0"	1 3/4"	SCW	STAIN	B	H.M.	2/A21	3/A21	05	-	NOTE 2
117	117	CLOSET	3'-0"	7'-0"	1 3/4"	SCW	STAIN	A	H.M.	2/A21	3/A21	07	-	NOTE 2
117A	117A	OFFICE	3'-0"	7'-0"	1 3/4"	SCW	STAIN	B	H.M.	2/A21	3/A21	05	-	NOTES 2 & 3 (2)
117B	117B	OFFICE	3'-0"	7'-0"	1 3/4"	SCW	STAIN	B	H.M.	2/A21	3/A21	05	-	NOTES 2 & 3
117C	117C	OFFICE	3'-0"	7'-0"	1 3/4"	SCW	STAIN	B	H.M.	2/A21	3/A21	05	-	NOTES 2 & 3
117D	117D	OFFICE	3'-0"	7'-0"	1 3/4"	SCW	STAIN	B	H.M.	2/A21	3/A21	05	-	NOTES 2 & 3
117E	117E	OFFICE	3'-0"	7'-0"	1 3/4"	SCW	STAIN	B	H.M.	2/A21	3/A21	05	-	NOTES 2 & 3
117F	117F	OFFICE	3'-0"	7'-0"	1 3/4"	SCW	STAIN	B	H.M.	2/A21	3/A21	05	-	NOTES 2 & 3
117G	117G	OFFICE	3'-0"	7'-0"	1 3/4"	SCW	STAIN	B	H.M.	2/A21	3/A21	05	-	NOTES 2 & 3
118	118	OPEN OFFICE	(2) 3'-0"	7'-0"	1 3/4"	ALUM	PREFIN	D	ALUM	4/A21	5/A21	34	-	NOTE 2
118A	118A	OFFICE	3'-0"	7'-0"	1 3/4"	SCW	STAIN	B	H.M.	2/A21	3/A21	05	-	NOTES 2 & 3 (2)
118B	118B	OFFICE	3'-0"	7'-0"	1 3/4"	SCW	STAIN	B	H.M.	2/A21	3/A21	05	-	NOTES 2 & 3
118C	118C	OFFICE	3'-0"	7'-0"	1 3/4"	SCW	STAIN	B	H.M.	2/A21	3/A21	05	-	NOTES 2 & 3
118D	118D	OFFICE	3'-0"	7'-0"	1 3/4"	SCW	STAIN	B	H.M.	2/A21	3/A21	05	-	NOTES 2 & 3
118E	118E	OFFICE	3'-0"	7'-0"	1 3/4"	SCW	STAIN	B	H.M.	2/A21	3/A21	05	-	NOTES 2 & 3
118F	118F	OFFICE	3'-0"	7'-0"	1 3/4"	SCW	STAIN	B	H.M.	2/A21	3/A21	05	-	NOTES 2 & 3
118G	118G	CLOSET	(2) 2'-6"	7'-0"	1 3/4"	SCW	STAIN	A	H.M.	2/A21	3/A21	08A	-	-
118H	118	OPEN OFFICE	(2) 3'-0"	7'-0"	1 3/4"	ALUM.	PREFIN.	D	ALUM	4/A21	5/A21	34	-	NOTE 2
119	119	HUDDLE	3'-0"	7'-0"	1 3/4"	SCW	STAIN	B	H.M.	2/A21	3/A21	05	-	NOTES 2 & 3 (2)
119A	119A	OFFICE	3'-0"	7'-0"	1 3/4"	SCW	STAIN	B	H.M.	2/A21	3/A21	05	-	NOTES 2 & 3
119B	119B	OFFICE	3'-0"	7'-0"	1 3/4"	SCW	STAIN	B	H.M.	2/A21	3/A21	05	-	NOTES 2 & 3
119C	119C	OFFICE	3'-0"	7'-0"	1 3/4"	SCW	STAIN	B	H.M.	2/A21	3/A21	05	-	NOTES 2 & 3
120	120	CORRIDOR	(2) 3'-0"	7'-0"	1 3/4"	ALUM	PREFIN	D	ALUM	4/A21	5/A21	13	-	NOTE 2
121	121	CORRIDOR	(2) 3'-0"	7'-0"	1 3/4"	ALUM	PREFIN	D	ALUM	11/A21	12/A21	01	-	NOTES 1 & 4
121A	121	COORIDOR	3'-0"	7'-0"	1 3/4"	SCW	STAIN	B	ALUM	7/A21	8/A21	09	-	NOTE 2
121B	121	COORIDOR	(2) 3'-0"	7'-0"	1 3/4"	ALUM	PREFIN	D	ALUM	11/A21	12/A21	01	-	NOTES 1 & 4
121C	121	COORIDOR	(2) 3'-0"	7'-0"	1 3/4"	ALUM	PREFIN.	D	EXIST.	N/A	N/A	01	-	NOTES 1 & 4
123	123	STUDENT LOUNGE	(2) 3'-0"	7'-0"	1 3/4"	ALUM	PREFIN	D	ALUM	4/A21	5/A21	13	-	NOTE 2
124	124	SERVERS	3'-0"	7'-0"	1 3/4"	SCW	STAIN	F	H.M.	2/A21	3/A21	14	-	NOTE 4
125	125	TECH	3'-0"	7'-0"	1 3/4"	SCW	STAIN	A	ALUM	7/A21	8/A21	09A	-	NOTES 2 & 4
126	126	RECORDING	3'-0"	7'-0"	1 3/4"	SCW	STAIN	B	H.M.	2/A21	3/A21	05	-	NOTE 2
127	127	OFFICE	3'-0"	7'-0"	1 3/4"	SCW	STAIN	B	H.M.	2/A21	3/A21	05	-	NOTE 2
128	128	OFFICE	3'-0"	7'-0"	1 3/4"	SCW	STAIN	B	H.M.	2/A21	3/A21	05	-	NOTE 2
129	129	BOOKSTORE	3'-0"	7'-0"	1 3/4"	ALUM	PREFIN	D	ALUM	4/A21	5/A21	15	-	NOTE 2
129A	129A	CLOSET	3'-0"	7'-0"	1 3/4"	SCW	STAIN	A	H.M.	2/A21	3/A21	07	-	-
130	130	EXISTING LECTURE HALL	3'-0"	7'-0"	1 3/4"	SCW	STAIN	C	ALUM	4/A21	5/A21	16	-	NOTE 2
130A	130	EXISTING LECTURE HALL	3'-0"	7'-0"	1 3/4"	SCW	STAIN	C	ALUM	7/A21	8/A21	16	-	NOTE 2
132	132	CORRIDOR	3'-0"	7'-0"	1 3/4"	SCW	STAIN	A	ALUM	7/A21	8/A21	15	-	-
132A	132	CORRIDOR	3'-0"	7'-0"	1 3/4"	SCW	STAIN	A	ALUM	7/A21	8/A21	16	-	-
132B	132	CORRIDOR	3'-0"	7'-0"	1 3/4"	SCW	STAIN	A	ALUM	7/A21	8/A21	19	-	-
132C	132	CORRIDOR	3'-0"	7'-0"	1 3/4"	SCW	STAIN	A	ALUM	7/A21	8/A21	19	-	-
132D	132	CORRIDOR	3'-0"	7'-0"	1 3/4"	SCW	STAIN	B	ALUM	7/A21	8/A21	15	-	NOTE 2
132E	132	COORIDOR	(2) 3'-0"	7'-0"	1 3/4"	ALUM	PREFIN.	D	EXIST.	N/A	N/A	01	-	NOTES 1 & 4
133	133	ELECTRIC	3'-0"	7'-0"	1 3/4"	SCW	STAIN	A	ALUM	7/A21	8/A21	18	-	-
133A	133A	FIRE PUMP	3'-0"	7'-0"	1 3/4"	H.M.	PAINTED	E	H.M.	9/A21	10/A21	35	-	-
133B	133	ELECTRIC	3'-0"	7'-0"	1 3/4"	H.M.	PAINTED	E	H.M.	9/A21	10/A21	21	-	-
134	134	TESTING LOBBY	3'-0"	7'-0"	1 3/4"	SCW	STAIN	F	ALUM	7/A21	8/A21	22	-	NOTE 2
134A	134A	CLOSET	3'-0"	7'-0"	1 3/4"	SCW	STAIN	A	H.M.	2/A21	3/A21	11	-	-
135	135	TESTING 1	3'-0"	7'-0"	1 3/4"	SCW	STAIN	F	H.M.	2/A21	3/A21	36	-	NOTE 2, PROVIDE SOUND GASKETING
136	136	TESTING 2	3'-0"	7'-0"	1 3/4"	SCW	STAIN	F	H.M.	2/A21	3/A21	36	-	NOTE 2, PROVIDE SOUND GASKETING
137	137	EXISTING LIBRARY	(2) 3'-0"	7'-0"	1 3/4"	SCW	STAIN	C	H.M.	13/A21	13/A21	24	45 MIN	WIRE GLASS @ VISION LITE
137A	137	EXISTING LIBRARY	3'-0"	7'-0"	1 3/4"	SCW	STAIN	C	H.M.	13/A21	13/A21	25	45 MIN	WIRE GLASS @ VISION LITE
137B	137	EXISTING LIBRARY	3'-0"	7'-0"	1 3/4"	H.M.	PAINTED	E	H.M.	6/A21	6/A21	02	-	-
138	138	OFFICE	3'-0"	7'-0"	1 3/4"	SCW	STAIN	B	ALUM	4/A21	5/A21	20	-	NOTE 2
139	139	STORAGE	3'-0"	7'-0"	1 3/4"	SCW	STAIN	B	H.M.	2/A21	3/A21	12	-	NOTE 2
140	140	HUDDLE	3'-0"	7'-0"	1 3/4"	SCW	STAIN	B	H.M.	2/A21	3/A21	05	-	NOTE 2
141	141	OFFICE	3'-0"	7'-0"	1 3/4"	SCW	STAIN	B	H.M.	2/A21	3/A21	05	-	NOTE 2
142	142	WORKROOM	3'-0"	7'-0"	1 3/4"	SCW	STAIN	B	H.M.	2/A21	3/A21	05	-	NOTE 2
142A	142A	CLOSET	3'-0"	7'-0"	1 3/4"	SCW	STAIN	A	H.M.	2/A21	3/A21	07	-	-
144	144	CORRIDOR	3'-0"	7'-0"	1 3/4"	SCW	STAIN	B	ALUM	7/A21	8/A21	15	-	NOTE 2
144A	144	CORRIDOR	3'-0"	7'-0"	1 3/4"	SCW	STAIN	B	EXIST	N/A	N/A	15	-	NOTE 2, VERIFY EXIST. OPENING MODIFY FRAME AS REQ'D
144B	144	CORRIDOR	3'-0"	7'-0"	1 3/4"	SCW	STAIN	B	ALUM	7/A21	8/A21	15	-	NOTE 2
144C	144	CORRIDOR	3'-0"	7'-0"	1 3/4"	SCW	STAIN	B	ALUM	7/A21	8/A21	15	-	NOTE 2
144D	144	CORRIDOR	3'-0"	7'-0"	1 3/4"	SCW	STAIN	B	ALUM	7/A21	8/A21	15	-	NOTE 2
144E	144	CORRIDOR	3'-0"	7'-0"	1 3/4"	SCW	STAIN	B	ALUM	7/A21	8/A21	15	-	NOTE 2
144F	144	COORIDOR	(2) 3'-0"	7'-0"	1 3/4"	ALUM	PREFIN.	D	EXIST.	N/A	N/A	01	-	NOTES 1 & 4
145	145	MEN	3'-0"	7'-0"	1 3/4"	SCW	STAIN	A	ALUM	7/A21	8/A21	06	-	-
146	146	COMPUTER CLASSROOM	3'-0"	7'-0"	1 3/4"	SCW	STAIN	B	ALUM	4/A21	5/A21	26	-	NOTE 2
147	147	GENERAL CLASSROOM	3'-0"	7'-0"	1 3/4"	SCW	STAIN	B	ALUM	4/A21	5/A21	26	-	NOTE 2
148	148	COMPUTER CLASSROOM	3'-0"	7'-0"	1 3/4"	SCW	STAIN	B	ALUM	4/A21	5/A21	26	-	NOTE 2
149	149	COMPUTER CLASSROOM	3'-0"	7'-0"	1 3/4"	SCW	STAIN	B	ALUM	4/A21	5/A21	26	-	NOTE 2
150	150	GENERAL CLASSROOM	3'-0"	7'-0"	1 3/4"	SCW	STAIN	B	ALUM	7/A21	8/A21	22	-	NOTE 2
151	151	NURSING LAB	3'-0"/1'-0"	7'-0"	1 3/4"	SCW	STAIN	B/A	ALUM	7/A21	8/A21	31	-	NOTE 2
152	152	NURSING STORAGE	3'-0"/1'-0"	7'-0"	1 3/4"	SCW	STAIN	A/A	H.M.	2/A21	3/A21	32	-	-
152A	152	NURSING STORAGE	3'-0"/1'-0"	7'-0"	1 3/4"	SCW	STAIN	A/A	H.M.	2/A21	3/A21	32	-	-
153	153	NURSING CLASSROOM	3'-0"/1'-0"	7'-0"	1 3/4"	SCW	STAIN	B/A	ALUM	7/A21	8/A21	31	-	NOTE 2
154	154	WOMEN	3'-0"	7'-0"	1 3/4"	SCW	STAIN	A	ALUM.	7/A21	8/A21	06	-	-
155	155	JANITOR	3'-0"	7'-0"	1 3/4"	SCW	STAIN	A	H.M.	6/A21	6/A21	07	-	-
156	156	CORRIDOR	(2) 3'-0"	7'-0"	1 3/4"	ALUM	PREFIN	D	ALUM	11/A21	12/A21	33	-	NOTE 2
156A	156A	VESTIBULE	(2) 3'-0"	7'-0"	1 3/4"	ALUM	PREFIN.	D	ALUM.	7/A21	8/A21	01	-	NOTES 1 & 4
157	157	CHEM/PHYSICS PREP	3'-6"	7'-0"	1 3/4"	SCW	STAIN	A	ALUM	7/A21	8/A21	28	-	-
157A	157	CHEM/PHYSICS PREP	3'-0"	7'-0"	1 3/4"	SCW	STAIN	G	H.M.	2/A21	3/A21	29	-	-
158	158	CHEM/PHYSICS LAB	3'-6"	7'-0"	1 3/4"	SCW	STAIN	B	ALUM	4/A21	5/A21	26	-	NOTE 2
159	159	BIOLOGY LAB 1	3'-6"	7'-0"	1 3/4"	SCW	STAIN	B	ALUM	4/A21	5/A21	26	-	NOTE 2
160	160	BIOLOGY PREP	3'-6"	7'-0"	1 3/4"	SCW	STAIN	A	ALUM	4/A21	5/A21	26	-	-
160A	160	BIOLOGY PREP	3'-0"	7'-0"	1 3/4"	SCW	STAIN	G	H.M.	2/A21	3/A21	30	-	-
160B	160	BIOLOGY PREP	3'-0"	7'-0"	1 3/4"	SCW	STAIN	G	H.M.	2/A21	3/A21	30	-	-
161	161	BIOLOGY LAB 2	3'-6"	7'-0"	1 3/4"	SCW	STAIN	B	ALUM	4/A21	5/A21	26	-	NOTE 2

NOTES:
1. GLAZING TYPE 1-2
2. GLAZING TYPE G-2
3. 1" UNDERCUT
4. ACCESS CONTROL

DOOR SCHEDULE - WARSAW CAMPUS

NUMBER		DOOR							FRAME			HDW	REMARKS	
DOOR #	SPACE#	ROOM NAME	WIDTH	HEIGHT	THICK.	MATERIAL	FINISH	TYPE	MATERIAL	HEAD	JAMB	SET NO.	RATING/MIN.	NOTES
100	100	VESTIBULE	(2) 3'-0"	7'-0"	1 3/4"	ALUM	PREFIN.	D	ALUM	11/A21	12/A21	01	-	NOTE 1 & 4
101	101	CORRIDOR	(2) 3'-0"	7'-0"	1 3/4"	ALUM	PREFIN	D	ALUM	11/A21	12/A21	03	-	NOTE 2
103	103	ADMISSIONS	3'-0"	7'-0"	1 3/4"	ALUM	PREFIN	D	ALUM	7/A21	8/A21	04	-	NOTE 2
104	104	OFFICE	3'-0"	7'-0"	1 3/4"	SCW	STAIN	B	H.M.	2/A21	3/A21	05	-	NOTES 2 & 3
106	106	MEN	3'-0"	7'-0"	1 3/4"	SCW	STAIN	A	ALUM	4/A21	5/A21	06	-	-
106A	106A	JANITOR	3'-0"	7'-0"	1 3/4"	SCW	STAIN	A	H.M.	2/A21	3/A21	07	-	-
107	107	WOMEN	3'-0"	7'-0"	1 3/4"	SCW	STAIN	A	ALUM	4/A21	5/A21	06	-	-
108	108	CLOSET	(2) 2'-0"	7'-0"	1 3/4"	SCW	STAIN	A	ALUM	4/A21	5/A21	08	-	-
109	109	OFFICE	3'-0"	7'-0"	1 3/4"	SCW	STAIN	B	ALUM	4/A21	5/A21	09	-	NOTE 2
110	110	OFFICE	3'-0"	7'-0"	1 3/4"	SCW	STAIN	B	ALUM	4/A21	5/A21	09	-	NOTE 2
111	111	OFFICE	3'-0"	7'-0"	1 3/4"	SCW	STAIN	B	ALUM	4/A21	5/A21	09	-	NOTE 2
112	112	OFFICE	3'-0"	7'-0"	1 3/4"	SCW	STAIN	B	ALUM	4/A21	5/A21	09	-	NOTE 2
113	113	OPEN OFFICE	3'-0"	7'-0"	1 3/4"	ALUM	PREFIN	D	ALUM	4/A21	5/A21	10	-	NOTE 2
114	114	OFFICE	3'-0"	7'-0"	1 3/4"	SCW	STAIN	B	H.M.	2/A21	3/A21	05	-	NOTE 2
115	115	OFFICE	3'-0"	7'-0"	1 3/4"	SCW	STAIN	B	H.M.	2/A21	3/A21	05	-	NOTE 2
116	116	OFFICE	3'-0"	7'-0"	1 3/4"	SCW	STAIN	B	HM	2/A21	3/A21	05	-	NOTE 2
117	117	OPEN OFFICE	3'-0"	7'-0"	1 3/4"	ALUM	PREFIN	D	ALUM	4/A21	5/A21	04	-	NOTE 2
117A	117A	HUDDLE	3'-0"	7'-0"	1 3/4"	SCW	STAIN	B	HM	2/A21	3/A21	05	-	NOTES 2 & 3
117B	117B	OFFICE	3'-0"	7'-0"	1 3/4"	SCW	STAIN	B	HM	2/A21	3/A21	05	-	NOTES 2 & 3
117C	117C	OFFICE	3'-0"	7'-0"	1 3/4"	SCW	STAIN	B	HM	2/A21	3/A21	05	-	NOTES 2 & 3
117D	117D	OFFICE	3'-0"	7'-0"	1 3/4"	SCW	STAIN	B	HM	2/A21	3/A21	05	-	NOTES 2 & 3
117E	117E	OFFICE	3'-0"	7'-0"	1 3/4"	SCW	STAIN	B	HM	2/A21	3/A21	05	-	NOTES 2 & 3
117F	117F	CLOSET	(2) 2'-6"	7'-0"	1 3/4"	SCW	STAIN	A	HM	2/A21	3/A21	08A	-	-
117G	117G	CLOSET	(2) 2'-6"	7'-0"	1 3/4"	SCW	STAIN	A	HM	2/A21	3/A21	08A	-	-
117H	117H	OFFICE	3'-0"	7'-0"	1 3/4"	SCW	STAIN	B	HM	2/A21	3/A21	05	-	NOTES 2 & 3
117J	117J	OFFICE	3'-0"	7'-0"	1 3/4"	SCW	STAIN	B	HM	2/A21	3/A21	05	-	NOTES 2 & 3
117K	117K	OFFICE	3'-0"	7'-0"	1 3/4"	SCW	STAIN	B	HM	2/A21	3/A21	05	-	NOTES 2 & 3
117L	117L	OFFICE	3'-0"	7'-0"	1 3/4"	SCW	STAIN	B	HM	2/A21	3/A21	05	-	NOTES 2 & 3
118	118	OPEN OFFICE	3'-0"	7'-0"	1 3/4"	ALUM	PREFIN	D	ALUM	4/A21	5/A21	04	-	NOTES 2 & 3
118A	118A	OFFICE	3'-0"	7'-0"	1 3/4"	SCW	STAIN	B	HM	2/A21	3/A21	05	-	NOTES 2 & 3
118B	118B	OFFICE	3'-0"	7'-0"	1 3/4"	SCW	STAIN	B	HM	2/A21	3/A21	05	-	NOTES 2 & 3
118C	118C	PURCHASING	3'-0"	7'-0"	1 3/4"	SCW	STAIN	B	HM	2/A21	3/A21	05	-	NOTES 2 & 3
118D	118D	STORAGE	3'-0"	7'-0"	1 3/4"	SCW	STAIN	B	HM	2/A21	3/A21	12	-	NOTE 3
119	119	CASHIER	3'-0"	7'-0"	1 3/4"	SCW	STAIN	A	HM	2/A21	3/A21	05	-	NOTE 2
120	120	CORRIDOR	(2) 3'-0"	7'-0"	1 3/4"	ALUM	PREFIN	D	ALUM	4/A21	5/A21	13	-	NOTE 2
121	121	CORRIDOR	(2) 3'-0"	7'-0"	1 3/4"	ALUM	PREFIN	D	ALUM	11/A21	12/A21	01	-	NOTES 1 & 4
121A	121	COORIDOR	(2) 3'-0"	7'-0"	1 3/4"	ALUM	PREFIN	D	ALUM	7/A21	8/A21	01	-	NOTES 1 & 4
121B	121	COORIDOR	3'-0"	7'-0"	1 3/4"	SCW	STAIN	B	ALUM	7/A21	8/A21	09	-	NOTE 2
121C	121	COORIDOR	3'-0"	7'-0"	1 3/4"	SCW	STAIN	A	ALUM	7/A21	8/A21	09	-	-
121D	121	COORIDOR	(2) 3'-0"	7'-0"	1 3/4"	ALUM	PREFIN.	D	EXIST.	N/A	N/A	01	-	NOTE 1 & 4
123	123	STUDENT LOUNGE	(2) 3'-0"	7'-0"	1 3/4"	ALUM	PREFIN	D	ALUM	4/A21	5/A21	13	-	NOTE 2
124	124	SERVERS	3'-0"	7'-0"	1 3/4"	SCW	STAIN	F	H.M.	2/A21	3/A21	14	-	NOTES 2 & 4
125	125	TECH	3'-0"	7'-0"	1 3/4"	SCW	STAIN	A	H.M.	7/A21	8/A21	09B	-	NOTE 4
125A	125A	OFFICE	3'-0"	7'-0"	1 3/4"	SCW	STAIN	B	H.M.	2/A21	3/A21	05	-	NOTE 2
126	126	OFFICE	3'-0"	7'-0"	1 3/4"	SCW	STAIN	B	H.M.	2/A21	3/A21	05	-	NOTE 2
127	127	OFFICE	3'-0"	7'-0"	1 3/4"	SCW	STAIN	B	H.M.	7/A21	8/A21	05	-	NOTE 2
128	128	OFFICE	3'-0"	7'-0"	1 3/4"	SCW	STAIN	B	H.M.	2/A21	3/A21	05	-	NOTE 2
129	129	BOOKSTORE	3'-0"	7'-0"	1 3/4"	SCW	STAIN	D	ALUM	4/A21	5/A21	15	-	NOTE 2
129A	129A	CLOSET	3'-0"	7'-0"	1 3/4"	SCW	STAIN	A	HM	2/A21	3/A21	12	-	-
130	130	EXISTING LECTURE HALL	3'-0"	7'-0"	1 3/4"	SCW	STAIN	C	ALUM	4/A21	5/A21	16	-	NOTE 2
130A	130	EXISTING LECTURE HALL	3'-0"	7'-0"	1 3/4"	SCW	STAIN	C	ALUM	4/A21	5/A21	16	-	NOTE 2
132	132	CORRIDOR	3'-0"	7'-0"	1 3/4"	SCW	STAIN	A	ALUM	7/A21	8/A21	15	-	-
132A	132	CORRIDOR	3'-0"	7'-0"	1 3/4"	SCW	STAIN	A	HM	2/A21	3/A21	16	-	-
132B	132	CORRIDOR	3'-0"	7'-0"	1 3/4"	SCW	STAIN	A	HM	2/A21	3/A21	19	-	-
132C	132	CORRIDOR	3'-0"	7'-0"	1 3/4"	SCW	STAIN	A	HM	2/A21	3/A21	19	-	-
132D	132	CORRIDOR	3'-0"	7'-0"	1 3/4"	SCW	STAIN	A	ALUM	7/A21	8/A21	06	-	-
132E	132	CORRIDOR	3'-0"	7'-0"	1 3/4"	SCW	STAIN	A	ALUM	7/A21	8/A21	06	-	-
132F	132	COORIDOR	(2) 3'-0"	7'-0"	1 3/4"	ALUM	PREFIN.	D	EXIST.	N/A	N/A	01	-	NOTE 1 & 4
133	133	ELECTRIC	3'-0"	7'-0"	1 3/4"	SCW	STAIN	A	ALUM	7/A21	8/A21	20	-	-
133A	133A	FIRE PUMP	3'-0"	7'-0"	1 3/4"	H.M.	PAINTED	E	H.M.	9/A21	10/A21	35	-	-
133B	133	ELECTRIC	3'-0"	7'-0"	1 3/4"	H.M.	PAINTED	E	H.M.	9/A21	10/A21	21	-	-
134	133	TUTORING LAB	3'-0"	7'-0"	1 3/4"	SCW	STAIN	B	H.M.	4/A21	3/A21	22	-	NOTE 2
135	135	CHILDRENS LIBRARY	3'-0"	7'-0"	1 3/4"	SCW	STAIN	F	H.M.	2/A21	3/A21	23	-	NOTE 2
137	137	EXISTING LIBRARY	(2) 3'-0"	7'-0"	1 3/4"	SCW	STAIN	C	H.M.	13/A21	13/A21	24	45 MIN.	WIRE GLASS @ VISION LITE
137A	137	EXISTING LIBRARY	3'-0"	7'-0"	1 3/4"	SCW	STAIN	C	H.M.	13/A21	13/A21	25	45 MIN.	WIRE GLASS @ VISION LITE
137B	137	EXISTING LIBRARY	3'-0"	7'-0"	1 3/4"	HM	PAINTED	E	HM	6/A21	6/A21	02	-	-
138	138	OFFICE	3'-0"	7'-0"	1 3/4"	SCW	STAIN	B	ALUM	4/A21	5/A21	09	-	NOTE 2
139	139	STORAGE	3'-0"	7'-0"	1 3/4"	SCW	STAIN	B	H.M.	2/A21	3/A21	12	-	NOTE 2
140	140	HUDDLE	3'-0"	7'-0"	1 3/4"	SCW	STAIN	B	H.M.	2/A21	3/A21	05	-	NOTE 2
141	141	OFFICE	3'-0"	7'-0"	1 3/4"	SCW	STAIN	B	H.M.	2/A21	3/A21	05	-	NOTE 2
142	142	WORKROOM	3'-0"	7'-0"	1 3/4"	SCW	STAIN	B	H.M.	2/A21	3/A21	05	-	NOTE 2
142A	142	CLOSET	3'-0"	7'-0"	1 3/4"	SCW	STAIN	A	H.M.	2/A21	3/A21	07	-	-
144	144	CORRIDOR	3'-0"	7'-0"	1 3/4"	SCW	STAIN	B	ALUM	7/A21	8/A21	15	-	NOTE 2
144A	144	CORRIDOR	3'-0"	7'-0"	1 3/4"	SCW	STAIN	B	ALUM	7/A21	8/A21	15	-	NOTE 2
144B	144	CORRIDOR	3'-0"	7'-0"	1 3/4"	SCW	STAIN	B	ALUM	7/A21	8/A21	15	-	NOTE 2
144C	144	CORRIDOR	3'-0"	7'-0"	1 3/4"	SCW	STAIN	B	ALUM	7/A21	8/A21	15	-	NOTE 2
144D	144	CORRIDOR	3'-0"	7'-0"	1 3/4"	SCW	STAIN	B	ALUM	7/A21	8/A21	15	-	NOTE 2
144E	144	CORRIDOR	3'-0"	7'-0"	1 3/4"	SCW	STAIN	B	ALUM	7/A21	8/A21	15	-	NOTE 2
144F	144	COORIDOR	(2) 3'-0"	7'-0"	1 3/4"	ALUM	PREFIN.	D	EXIST.	N/A	N/A	01	-	NOTE 1 & 4
145	145	MEN	3'-0"	7'-0"	1 3/4"	SCW	STAIN	A	ALUM	4/A21	5/A21	06	-	-
146	146	OPEN OFFICE	3'-0"	7'-0"	1 3/4"	SCW	STAIN	F	ALUM	11/A21	5/2/A21	26	-	NOTE 2
146A	146A	OFFICE	3'-0"	7'-0"	1 3/4"	SCW	STAIN	B	H.M.	2/A21	3/A21	05	-	NOTES 2 & 3
146B	146B	OFFICE	3'-0"	7'-0"	1 3/4"	SCW	STAIN	B	H.M.	2/A21	3/A21	05	-	NOTES 2 & 3
146C	146C	OFFICE	3'-0"	7'-0"	1 3/4"	SCW	STAIN	B	H.M.	2/A21	3/A21	05	-	NOTES 2 & 3
146D	146D	CLOSET	3'-0"	7'-0"	1 3/4"	SCW	STAIN	A	H.M.	2/A21	3/A21	07	-	-
146E	146E	OFFICE	3'-0"	7'-0"	1 3/4"	SCW	STAIN	B	H.M.	2/A21	3/A21	05	-	NOTES 2 & 3
146F	146F	OFFICE	3'-0"	7'-0"	1 3/4"	SCW	STAIN	B	H.M.	2/A21	3/A21	05	-	NOTES 2 & 3
146G	146G	CLOSET	3'-0"	7'-0"	1 3/4"	SCW	STAIN	A	H.M.	2/A21	3/A21	07	-	-
146H	146H	OFFICE	3'-0"	7'-0"	1 3/4"	SCW	STAIN	B	H.M.	2/A21	3/A21	05	-	NOTES 2 & 3
146J	146J	OFFICE	3'-0"	7'-0"	1 3/4"	SCW	STAIN	B	H.M.	2/A21	3/A21	05	-	NOTES 2 & 3
146K	146K	OFFICE	3'-0"	7'-0"	1 3/4"	SCW	STAIN	B	H.M.	2/A21	3/A21	05	-	NOTES 2 & 3
146L	146L	OFFICE	3'-0"	7'-0"	1 3/4"	SCW	STAIN	B	H.M.	2/A21	3/A21	05	-	NOTES 2 & 3
147	147	OPEN OFFICE	3'-0"	7'-0"	1 3/4"	SCW	STAIN	B	ALUM	7/A21	8/A21	09	-	NOTE 2
147A	147A	OFFICE	3'-0"	7'-0"	1 3/4"	SCW	STAIN	B	H.M.	2/A21	3/A21	05	-	NOTE 2
148	148	COMPUTER CLASSROOM	3'-0"	7'-0"	1 3/4"	SCW	STAIN	B	ALUM	4/A21	5/A21	26	-	NOTE 2
149	149	COMPUTER CLASSROOM	3'-0"	7'-0"	1 3/4"	SCW	STAIN	B	ALUM	4/A21	5/A21	26	-	NOTE 2
150	150	GENERAL CLASSROOM	3'-0"	7'-0"	1 3/4"	SCW	STAIN	B	ALUM	7/A21	8/A21	22	-	NOTE 2
151	151	NURSING LAB	3'-0"/1'-0"	7'-0"	1 3/4"	SCW	STAIN	B/A	ALUM	7/A21	8/A21	31	-	NOTE 2
152	152	NURSING STORAGE	3'-0"/1'-0"	7'-0"	1 3/4"	SCW	STAIN	A/A	H.M.	2/A21	3/A21	32	-	-
152A	152	NURSING STORAGE	3'-0"/1'-0"	7'-0"	1 3/4"	SCW	STAIN	A/A	H.M.	2/A21	3/A21	32	-	-
153	153	NURSING CLASSROOM	3'-0"/1'-0"	7'-0"	1 3/4"	SCW	STAIN	B/A	ALUM	7/A21	8/A21	31	-	NOTE 2
154	154	WOMEN	3'-0"	7'-0"	1 3/4"	SCW	STAIN	A	ALUM	7/A21	8/A21	06	-	-
155	155	JANITOR	3'-0"	7'-0"	1 3/4"	SCW	STAIN	A	ALUM	7/A21	8/A21	27	-	-
156	156	COORIDOR	(2) 3'-0"	7'-0"	1 3/4"	ALUM	PREFIN.	D	ALUM	11/A21	12/A21	33	-	NOTE 2
156A	156A	VESTIBULE	(2) 3'-0"	7'-0"	1 3/4"	ALUM	PREFIN.	D	EXIST.	N/A	N/A	01	-	NOTE 1 & 4
157	157	CHEM/PHYSICS PREP	3'-6"	7'-0"	1 3/4"	SCW	STAIN	A	ALUM	7/A21	8/A21	28	-	-
157A	157	CHEM/PHYSICS PREP	3'-6"	7'-0"	1 3/4"	SCW	STAIN	G	H.M.	6/A21	6/A21	29	-	-
158	158	CHEM/PHYSICS LAB	3'-6"	7'-0"	1 3/4"	SCW	STAIN	B	ALUM	7/A21	8/A21	26	-	NOTE 2
159	159	BIOLOGY LAB 1	3'-6"	7'-0"	1 3/4"	SCW	STAIN	B	ALUM	7/A21	8/A21	26	-	NOTE 2
160	160	BIOLOGY PREP	3'-6"	7'-0"	N/A	SCW	STAIN	A	ALUM	7/A21	8/A21	26	-	-
160A	160	BIOLOGY PREP	3'-0"	7'-0"	1 3/4"	SCW	STAIN	G	H.M.	2/A21	3/A21	30	-	-
160B	160	BIOLOGY PREP	3'-0"	7'-0"	1 3/4"	SCW	STAIN	G	H.M.	2/A21	3/A21	30	-	-
161	161	BIOLOGY LAB 2	3'-6"	7'-0"	1 3/4"	SCW	STAIN	B	ALUM	7/A21	8/A21	26	-	NOTE 2

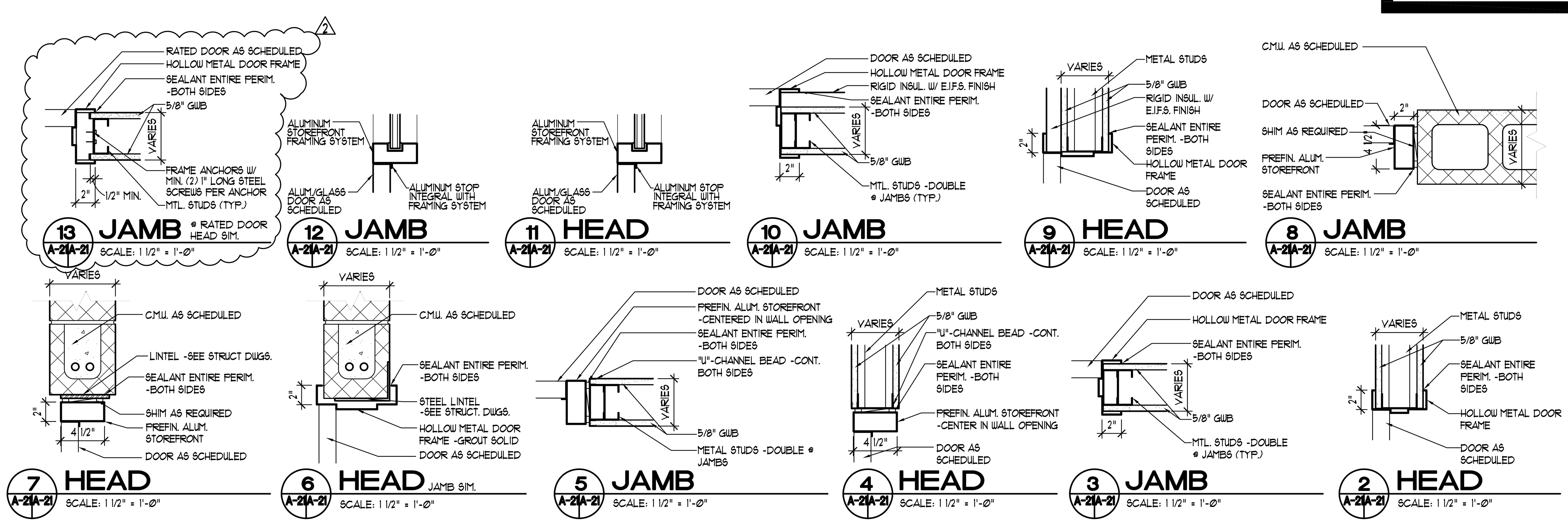

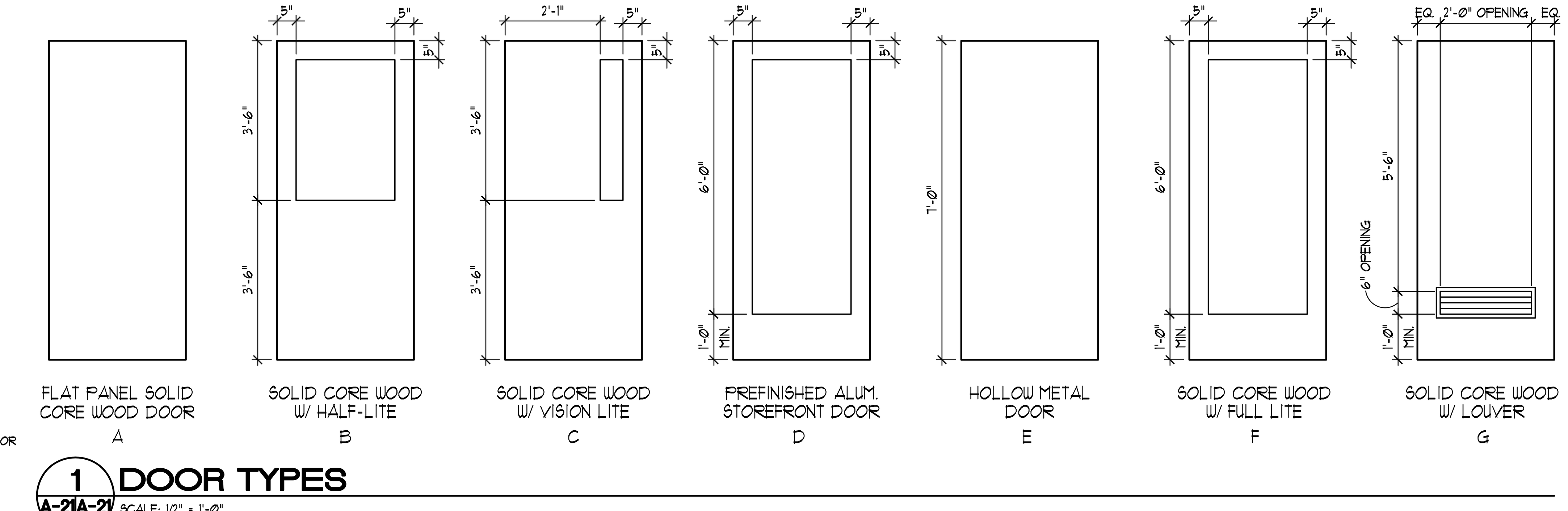

nbj ARCHITECTURE
A Professional Limited Company
GROVE PARK SQUARE
11537-B NUCKOLS ROAD
Glen Allen, Virginia 23059
(804) 273-9811 fax: (804) 273-9843

RAPPAHANNOCK COMMUNITY COLLEGE
CAMPUS RENOVATIONS
WARSAW + GLENNS, VIRGINIA
PC: 260-17712

DOOR SCHEDULES, TYPES + DETAILS

Date: JANUARY 13, 2010

REVISIONS	
NO.	DATE
1	MARCH 05, 2010
2	REV. WORK 3/3/2010

COMMONWEALTH OF VIRGINIA
STEPHEN FLOYD CYBULSKI
Lic.No.013047
ARCHITECT

Sheet A-21

File Number RCC-A21-DOOR